Atlantis 120 US

ASSET® water technology

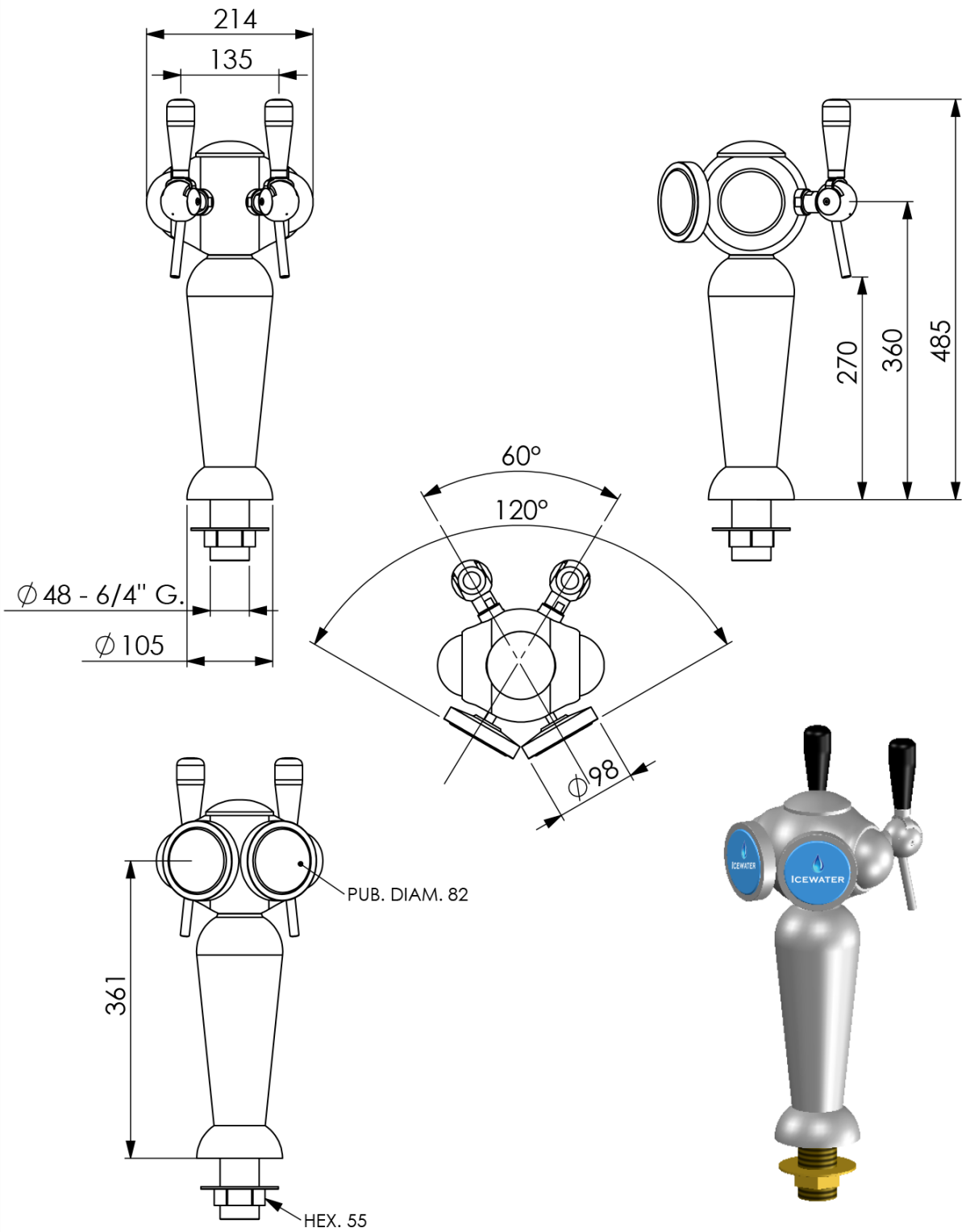

	Pdwhuldo=#		Ilqlvk=#EUDVV#FKURPHG		Zhljkw=#0j
	Gudzqhg#e| Urodqg#Gh#Kdxz	Gdwh 63245253431	Fkhfnhg#e| 0	Dssuryhg#e| 0	Ilohqdph SDULVLHQQH#5G#LOOXPLQHH
Xqlwv=#pp/j/°	Antoine	uxh#gh#od#Elhqyhqxh/#:0< Yhuzhonrplqjvvwuddw 43:3#Eux{hoohv#2#Euxvvho Who=#651518561<7163 Id{=#6515185313914; zzz1dqwrlqhehojlxp1eh whfkqlfdoCdqwrlqhehojlxp1eh	SDULVLHQQH#5G#LOOXPLQHH	Irupdw D7	Vfdoh 4=43
Riilfh=#EUX			Sodq#Qu1#DQW2U4780335	Hglwlrq D	Vkhhw 424

Technical Features	Atlantis 120
Power Supply Voltage	220 - 230V - 50Hz - Singlephase
Max Power Consumption	830W - 3.6A
Ambient Temperature Range	10 - 32 °C
Refrigerant Gas Quantity	R134a - 125 g
Water Temperature Range	2°C Min to 8°C Max
Cold and Sparkling Water Output	120 L/H Δt 10
Water Working Pressure Min -Max	(1.5 - 4 Bar)
Carbonator Capacity	2l
C02 Working Pressure Min - Max	(3.5 - 5.5 Bar)
Ice Bank	8kg